EXPERIMENT 1: Study of Logic Gates

AIM: To study and verify the truth table of logic gates

LEARNING OBJECTIVE:

• Identify various ICs and their specification.

COMPONENTS REQUIRED:

• Logic gates (IC) trainer kit.

• Connecting patch chords.

• IC 7400(2 i/p NAND gate), IC 7409(2 i/p AND gate), IC 7432(2 i/p OR gate), IC 7406, IC 7402(2 i/p NOR gate), IC 7404(NOT gate), IC 7486(2 i/p EXOR gate)

THEORY:

The basic logic gates are the building blocks of more complex logic circuits. These logic gates perform the basic Boolean functions, such as AND, OR, NAND, NOR, Inversion, Exclusive-OR, Exclusive-NOR. Fig. below shows the circuit symbol, Boolean function, and truth table. It is seen from the Fig that each gate has one or two binary inputs, A and B, and one binary output, C. The small circle on the output of the circuit symbols designates the logic complement. The AND, OR, NAND, and NOR gates can be extended to have more than two inputs. A gate can be extended to have multiple inputs if the binary operation it represents is commutative and associative.

These basic logic gates are implemented as small-scale integrated circuits (SSICs) or as part of more complex medium scale (MSI) or very large-scale (VLSI) integrated circuits. Digital IC gates are classified not only by their logic operation, but also the specific logic-circuit family to which they belong. Each logic family has its own basic electronic circuit upon which more complex digital circuits and functions are developed. The following logic families are the most frequently used.

TTL -> Transistor-transistor logic

ECL -> Emitter-coupled logic

MOS -> Metal-oxide semiconductor

CMOS ->Complementary metal-oxide semiconductor

TTL and ECL are based upon bipolar transistors. TTL has a well established popularity among logic families. ECL is used only in systems requiring high-speed operation. MOS and CMOS, are based on field effect transistors. They are widely used in large scale integrated circuits because of their high component density and relatively low power consumption. CMOS logic consumes far less power than MOS logic. There are various commercial integrated circuit chips available. TTL ICs are usually distinguished by numerical designation as the 5400 and 7400 series.

PROCEDURE:

1. Check the components using IC Tester.

2. Insert the appropriate IC into the IC base or directly into the bread board.

3. Make connections as shown in the circuit diagram w.r.t the pin description of the relevant IC.

4. Provide the input data via the input switches and observe the output on output LEDs.

S.NO	GATE	SYMBOL	INPUTS		OUTPUT
			A	B	C
1.	NAND IC 7400		0	0	1
			0	1	1
			1	0	1
			1	1	0
2.	NOR IC 7402	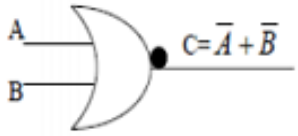	0	0	1
			0	1	0
			1	0	0
			1	1	0
3.	AND IC 7408		0	0	0
			0	1	0
			1	0	0
			1	1	1
4.	OR IC 7432	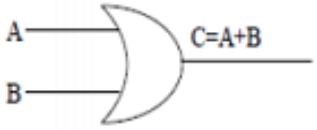	0	0	0
			0	1	1
			1	0	1
			1	1	1
5.	NOT IC 7404	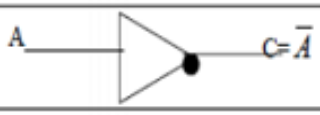	1	-	0
			0	-	1
6.	EX-OR IC 7486		0	0	0
			0	1	1
			1	0	1
			1	1	0

IC PIN DESCRIPTION:

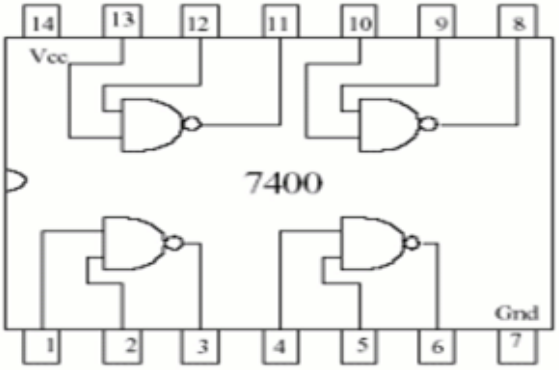

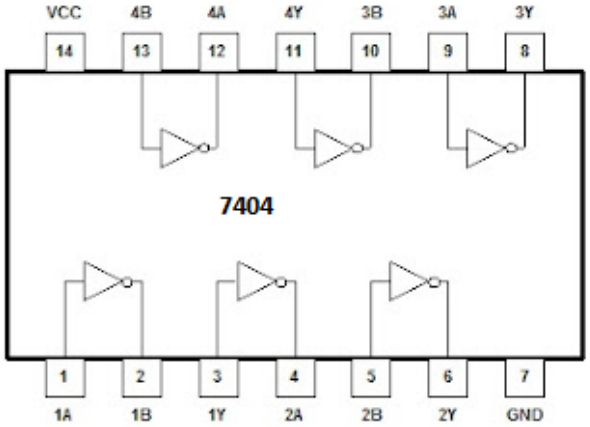

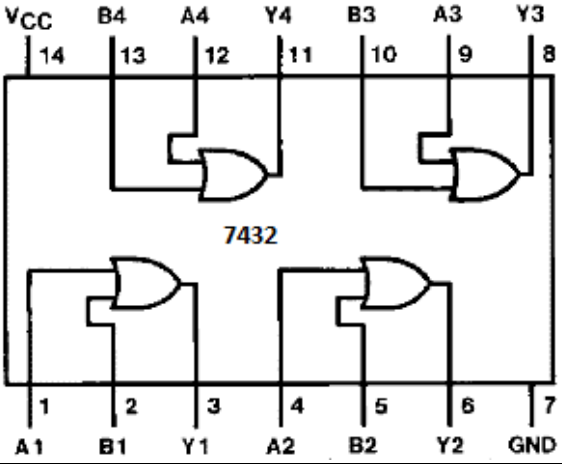

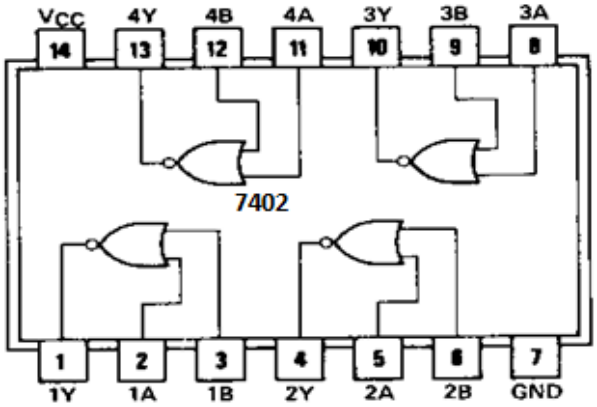

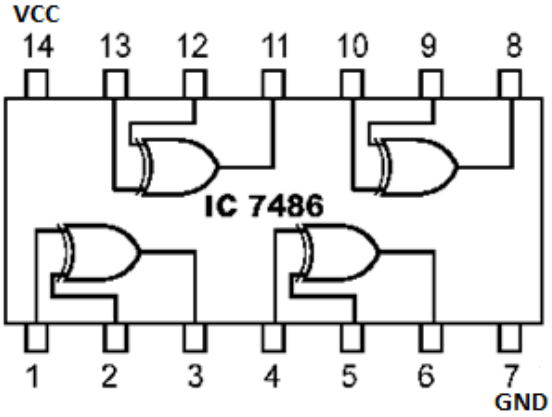

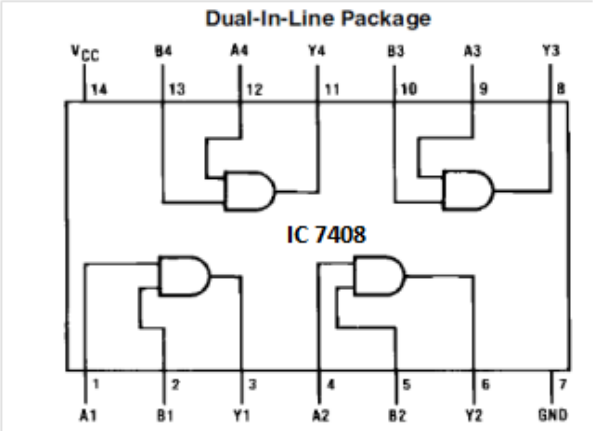

EXPERIMENT 2: Experimentation on the characteristics of gates in negative and in positive logic.

AIM: (a) NAND gate – verification in negative logic
(b) Verification of Duality principle: Positive & Negative Logic

Theory: We know that in a positive logic system the more positive of the two voltage levels is represented by a 1 and the more negative by a 0. In a negative logic system the more positive of the two voltage levels is represented by a 0 and the more negative by a 1. This distinction between positive and negative logic systems is important because an OR gate in the positive logic system becomes an AND gate in the negative logic system and vice versa. Positive and negative logics thus give rise to a basic duality in all Boolean identities. When changing from 1 logic system to another, a 0 becomes a 1 and a 1 becomes a 0. Furthermore an AND gate becomes an OR gate and an OR gate becomes an AND gate.

For a given Boolean expression**, A.(B+C) = A.B + A.C , the dual is A+B.C = (A+B).(A+C)**

Therefore the first expression in negative logic should give it's dual, i.e. the second expression.

Components Required:
• Logic gates (IC) trainer kit.

• Connecting patch chords.

•IC 7409(Quad 2-input AND gate), IC 7432(Quad 2-input OR gate)

Procedure:

Observation:

A	B	C	B+C	A.(B+C)	A.B	A.C	A.B+A.C
0	0	0	0	0	0	0	0
0	0	1	1	0	0	0	0
0	1	0	1	0	0	0	0
0	1	1	1	0	0	0	0
1	0	0	0	0	0	0	0
1	0	1	1	1	0	1	1
1	1	0	1	1	1	0	1
1	1	1	1	1	1	1	1

Table 1: in positive logic

A	B	C	B.C	A+B.C	A+B	A+C	(A+B).(A+C)
0	0	0	0	0	0	0	0
0	0	1	1	0	0	0	0
0	1	0	1	0	0	0	0
0	1	1	1	0	0	0	0
1	0	0	0	0	0	0	0
1	0	1	1	1	0	1	1
1	1	0	1	1	1	0	1
1	1	1	1	1	1	1	1

Table 2: dual in negative logic

Inference: The truth tables are same which implies that if we express the dual of a Boolean expression in negative logic it is the same as expressing the Boolean expression in positive logic.

<u>EXPERIMENT 3:</u> Realization of basic gates using universal gates.

<u>Aim:</u> (a) NAND gate implementation of XOR and XNOR gates.
(b) NOR gate implementation of XOR and XNOR gates.

<u>THEORY:</u> NAND and NOR gates are referred to as Universal gates because all the other logic gates can be realized using these gates.

(i) XOR using NAND:

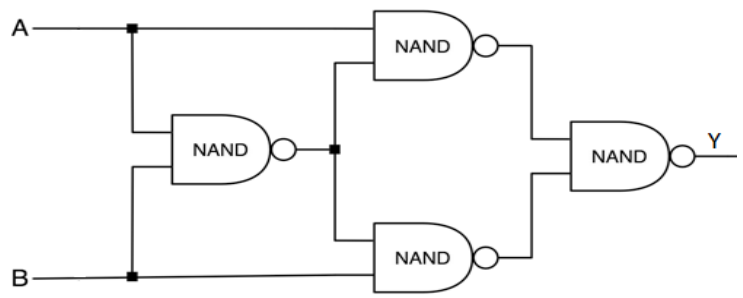

(ii) XOR using NOR:

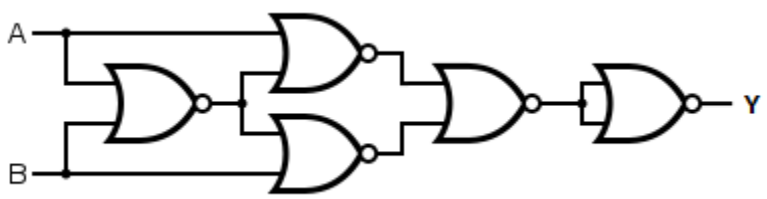

(iii) XNOR using NAND:

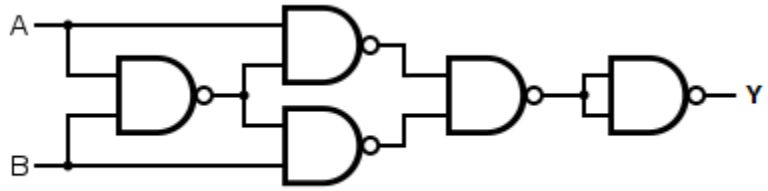

(iv) XNOR using NOR:

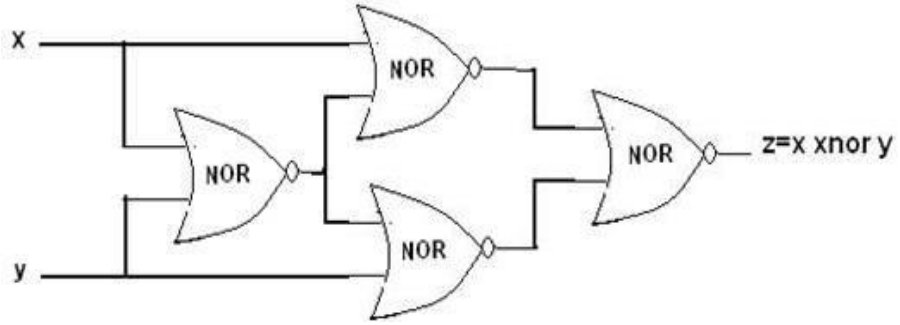

COMPONENTS REQUIRED:

• Logic gates (IC) trainer kit.

• Connecting patch chords.

•IC 7400(Quad 2-input NAND gate), IC 7402(Quad 2-input NOR gate)

PROCEDURE:

For each circuit make the necessary connections and then give inputs to the circuits using the input switches. Observe and note the outputs in the output LEDs.

OBSERVATION:

(i) XOR using NAND

A	B	Y
0	0	0
0	1	1
1	0	1
1	1	0

(ii) XOR using NOR

A	B	Y
0	0	0
0	1	1
1	0	1
1	1	0

(iii) XNOR using NAND

A	B	Y
0	0	1
0	1	0
1	0	0
1	1	1

(iv) XNOR using NOR

A	B	Y
0	0	1
0	1	0
1	0	0
1	1	1

INFERENCE: From the respective truth tables it is seen that the XOR and XNOR implementations using Universal gates are correct.

EXPERIMENT 4: Realization of Boolean functions using (i) basic logic gates and (ii) universal gates

AIM: To simplify the expression, F(A,B,C,D) = ∑m (2,5,7,8,9,10,13,15) and to realize it using Basic gates and Universal gates.

THEORY:

Any Boolean function can be written in disjunctive normal form (sum of min-terms) or conjunctive normal form (product of max-terms). A Boolean function can be represented by a Karnaugh map in which each cell corresponds to a minterm/maxterm. The cells are arranged in such a way that any two immediately adjacent cells correspond to two minterms/maxterms of distance 1. The K-map leads to a simplified expression.

COMPONENTS REQUIRED:

• Logic gates (IC) trainer kit.

• Connecting patch chords.

•IC 7400(Quad 2-input NAND gate), IC 7432(Quad 2-input OR gate), IC 7404(Hex Inverter), IC 7408(Quad 2-input AND gate), IC 7411(Triple 3-input AND gate)

PROCEDURE:

(a) The K-map is prepared for the given expression and proper grouping is done to find the simplified expression.

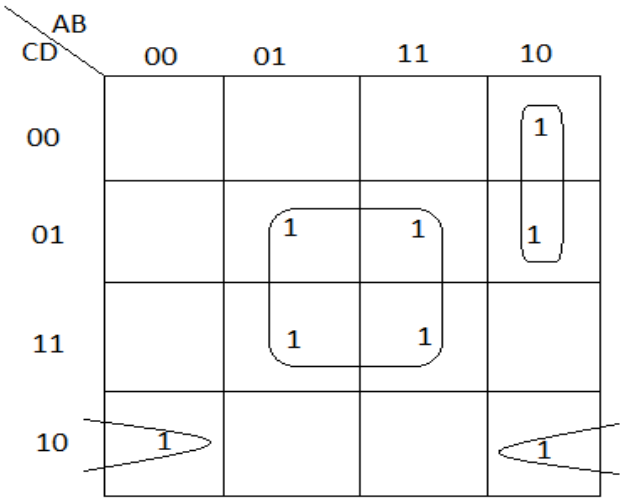

Y = BD + AB'C' + B'CD'

Design using basic logic gates:

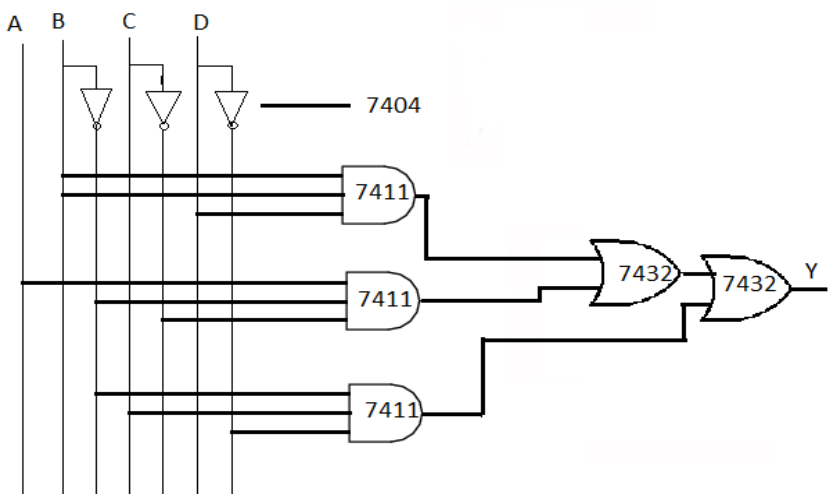

Design using only NAND gates:

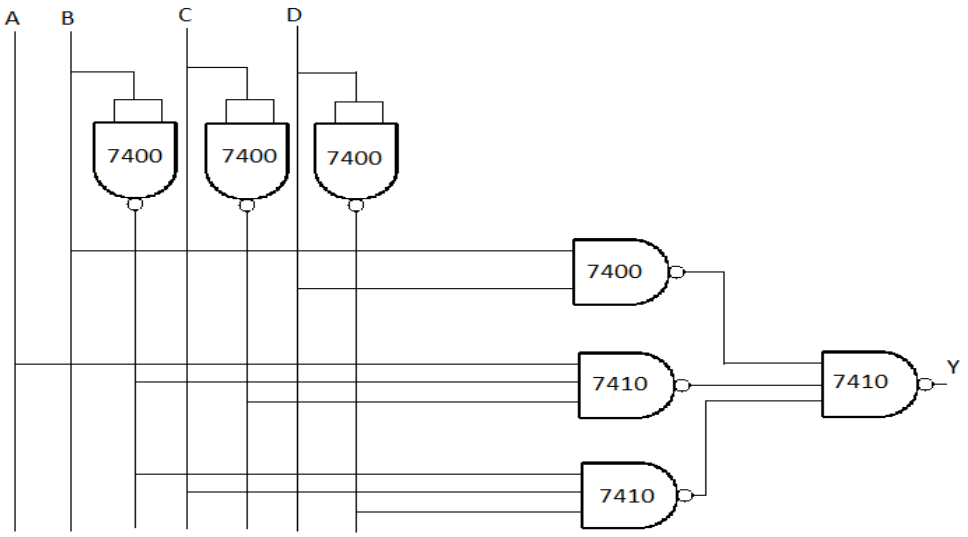

<u>INFERENCE:</u> The design using basic logic gates requires 3 ICs (IC 7404, IC 7411, IC 7432) whereas the design using Universal gates requires 2 ICs (IC 7400 and IC 7410) leading to a more compact design.

EXPERIMENT 6: Design and implementation of combinational circuits.

AIM:

(a) Design a Binary to Gray code converter
(b) Design Half/Full Adder/Subtractor

THEORY:

(a) **Binary to Gray code converter:** A combinational circuit that takes a 4-bit binary number (B3B2B1B0) as input and gives the equivalent 4-bit Gray code (G3G2G1G0) as output.
G3=B3;
G2=B3 ⊕ B2 ;
G1=B1 ⊕ B2;
G0=B1 ⊕ B0;

(b) **Half-Adder**: A combinational logic circuit that performs the addition of two data bits, A and B, is called a half-adder. Addition will result in two output bits; one of which is the sum bit, S, and the other is the carry bit, C. The Boolean functions describing the half-adder are:
S =A ⊕ B, C = A B

Full-Adder: The half-adder does not take the carry bit from its previous stage into account. This carry bit from its previous stage is called carry-in bit. A combinational logic circuit that adds two data bits, A and B, and a carry-in bit, Cin , is called a full-adder. The Boolean functions describing the full-adder are:
S = (A ⊕ B) ⊕ Cin, C = AB + Cin (A ⊕ B)

Half Subtractor: Subtracting a single-bit binary value B from another A (i.e. A -B) produces a difference bit D and a borrow out bit B-out. This operation is called half subtraction and the circuit to realize it is called a half subtractor. The Boolean functions describing the half Subtractor are:
S =A ⊕ B, C = A' B

Full Subtractor: Subtracting two single-bit binary values, B, Cin from a single-bit value A produces a difference bit D and a borrow out Br bit. This is called full subtraction. The Boolean functions describing the full-subtractor are:
D = (A ⊕ B) ⊕ Cin, Br= A'B + A'(Cin) + B(Cin)

COMPONENTS REQUIRED:

IC 7400(Quad 2-input NAND gate), IC 7486(Quad 2-input XOR gate), and IC 7408, Patch Cords & IC Trainer Kit

PROCEDURE:

(a) The Truth Table for Binary to Gray code converter is given below. The K-maps are made from the truth table and then the simplified expressions for G3, G2, G1 and G0 are obtained.

0	0	1	1
0	0	1	1
0	0	1	1
0	0	1	1

G3 = B3

0	1	0	1
0	1	0	1
0	1	0	1
0	1	0	1

G2= B3 ⊕ B2

0	1	1	0
0	1	1	0
1	0	0	1
1	0	0	1

G1=B1 ⊕ B2

0	0	0	0
1	1	1	1
0	0	0	0
1	1	1	1

G0=B1 ⊕ B0

B3	B2	B1	B0	G3	G2	G1	G0
0	0	0	0	0	0	0	0
0	0	0	1	0	0	0	1
0	0	1	0	0	0	1	1
0	0	1	1	0	0	1	0
0	1	0	0	0	1	1	0
0	1	0	1	0	1	1	1
0	1	1	0	0	1	0	1
0	1	1	1	0	1	0	0
1	0	0	0	1	1	0	0
1	0	0	1	1	1	0	1
1	0	1	0	1	1	1	1
1	0	1	1	1	1	1	0
1	1	0	0	1	0	1	0
1	1	0	1	1	0	1	1
1	1	1	0	1	0	0	1
1	1	1	1	1	0	0	0

Connections are made as per circuit diagram. Various input combinations are provided using the input switches and the outputs are observed on the LEDs.

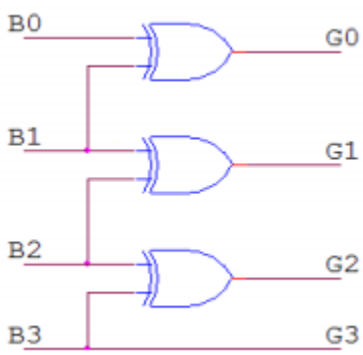

(b) The Truth Tables for Half/full adder/subtractor circuits are given below along with respective K-maps for deriving simplified expressions.

TO REALIZE HALF ADDER

TRUTH TABLE

INPUTS		OUTPUTS	
A	B	S	C
0	0	0	0
0	1	1	0
1	0	1	0
1	1	0	1

BOOLEAN EXPRESSIONS:

$S = A \oplus B$

$C = A\,B$

i) Basic Gates

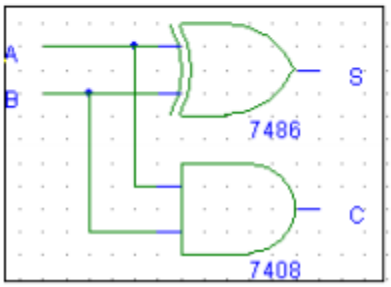

ii) NAND Gates

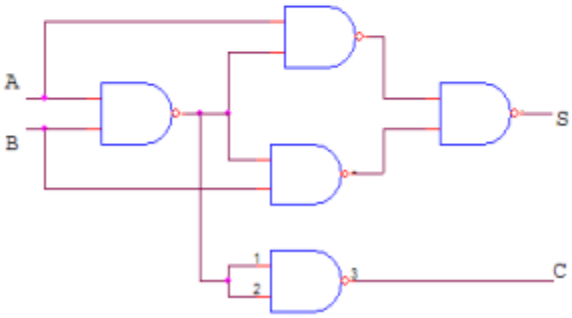

FULL ADDER

TRUTH TABLE

INPUTS			OUTPUTS	
A	B	Cin	S	C
0	0	0	0	0
0	0	1	1	0
0	1	0	1	0
0	1	1	0	1
1	0	0	1	0
1	0	1	0	1
1	1	0	0	1
1	1	1	1	1

BOOLEAN EXPRESSIONS:

$S = A \oplus B \oplus C$

$C = A\,B + B\,Cin + A\,Cin$

C \ AB	00	01	11	10
0		1		1
1	1		1	

S = A'BC' + AB'C' + A'B'C + ABC

C \ AB	00	01	11	10
0			1	
1		1	1	1

COUT = AB + BC + AC

i) using basic gates

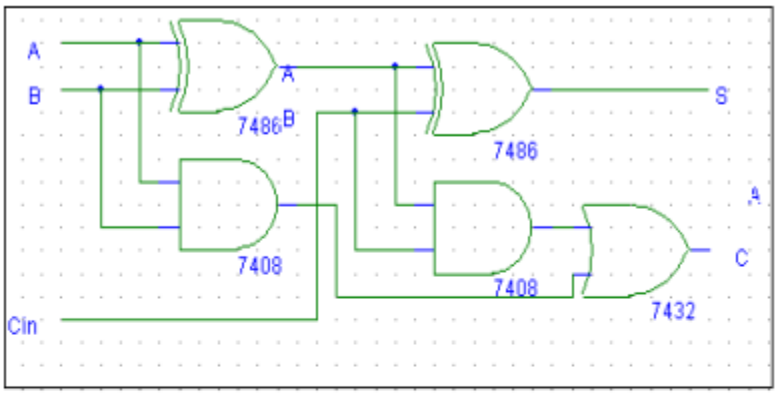

ii) using only NAND gates

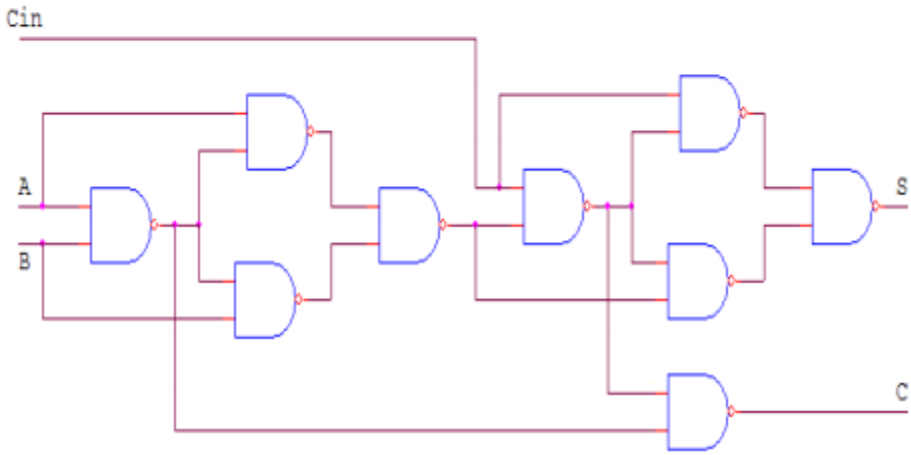

HALF SUBTRACTOR

TRUTH TABLE

INPUTS		OUTPUTS	
A	B	D	Br
0	0	0	0
0	1	1	1
1	0	1	0
1	1	0	0

BOOLEAN EXPRESSIONS:

$$D = A \oplus B$$

$$Br = \bar{A}B$$

i)BASIC GATES

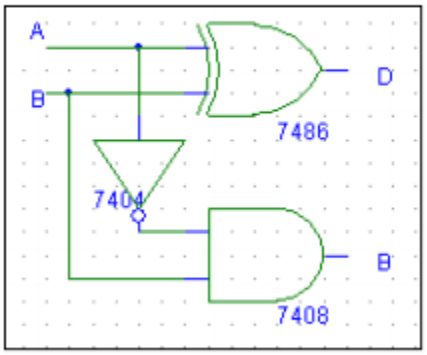

ii) NAND Gates

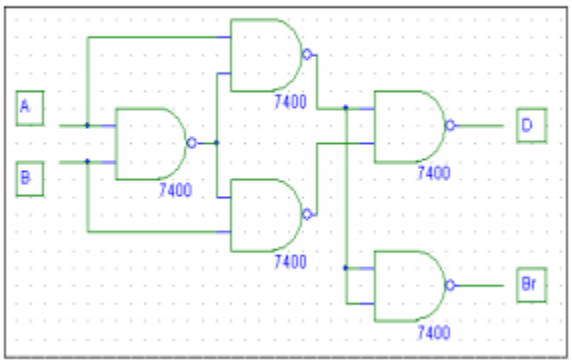

FULL SUBTRACTOR

TRUTH TABLE

INPUTS			OUTPUTS	
A	B	Cin	D	Br
0	0	0	0	0
0	0	1	1	1
0	1	0	1	1
0	1	1	0	1
1	0	0	1	0
1	0	1	0	0
1	1	0	0	0
1	1	1	1	1

BOOLEAN EXPRESSIONS:

$$D = A \oplus B \oplus C$$

$$Br = \bar{A}\ B + B\ Cin + \bar{A}\ Cin$$

i) BASIC GATES

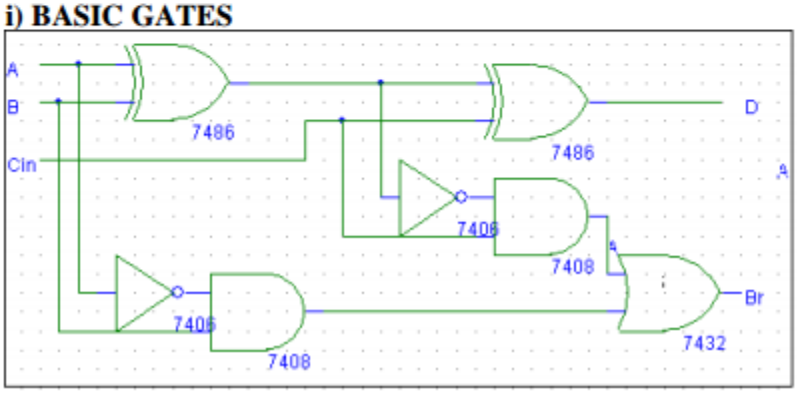

Inference:

(a) The Gray code equivalent of the input binary number can be observed on the output LEDs.

(b) The truth tables for half/full adder/subtracter circuits are verified.

EXPERIMENT 7: MULTIPLEXER AND DEMULTIPLEXER

AIM:

1) To design and set up a 4:1 Multiplexer (MUX) using only NAND gates.
2) To design and set up a 1:4 Demultiplexer (DE-MUX) using only NAND gates.
3) To set up a Half/Full Adder using IC 74153 (Dual 4:1 Multiplexer).

LEARNING OBJECTIVE:

- To learn about various applications of multiplexer and de-multiplexer
- To learn and understand the working of IC 74153(MUX) and IC 74139(DEMUX)
- To learn to realize any function using Multiplexer

THEORY:

Multiplexers are very useful components in digital systems. They transfer a large number of information units over a smaller number of channels, (usually one channel) under the control of selection signals. Multiplexer means many to one. A multiplexer is a circuit with many inputs but only one output. By using control signals (select lines) we can select any input to the output. Multiplexer is also called as data selector because the output bit depends on the input data bit that is selected. The general multiplexer circuit has 2^n input signals, n control/select signals and 1 output signal.

De-multiplexers perform the opposite function of multiplexers. They transfer a small number of information units (usually one unit) over a larger number of channels under the control of selection signals. The general de-multiplexer circuit has 1 input signal, n control/select signals and 2^n output signals. De-multiplexer circuit can also be realized using a decoder circuit with enable.

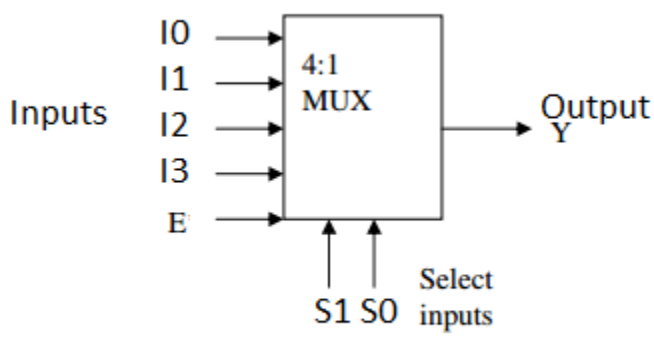

Output Y= E S1'S0'I0 + E S1'S0I1 + E S1S0'I2 + E S1S0I3

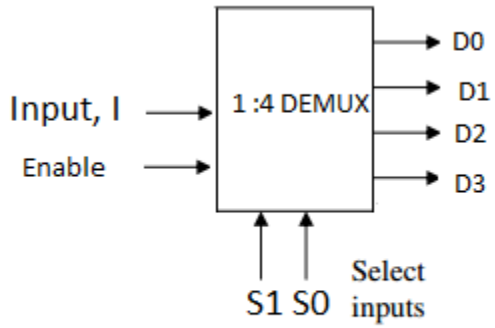

D0=IS1'S0' D1=IS1'S0 D2=IS1S0' D3=IS1S0

PIN DIAGRAM OF IC 74153 (DUAL 4:1 MULTIPLEXER)

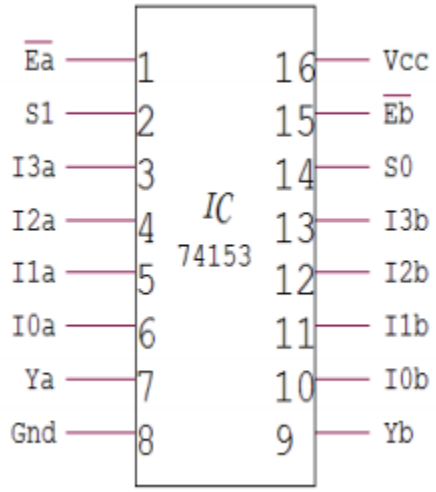

<u>COMPONENTS REQUIRED</u>: IC 7400, IC 7410, IC 7404, IC 74153, Patch Cords & IC Trainer Kit

<u>PROCEDURE</u>:

(1) Realization of a Multiplexer using NAND gates (without including Enable line)

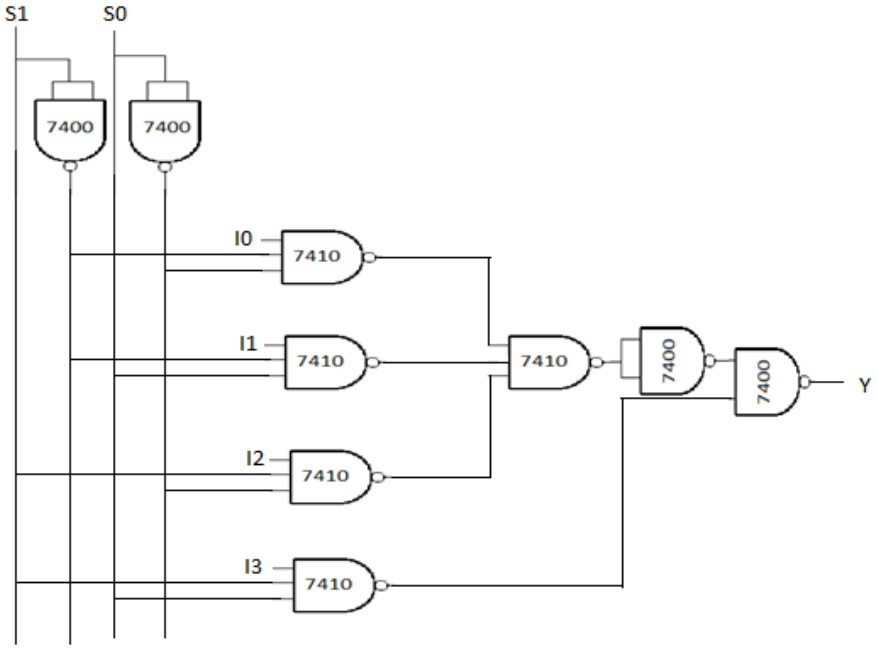

The connections are made according to the above circuit diagram. Inputs I0, I1, I2, I3, S0 and S1 are provided to the circuit through the input switches and the corresponding output is observed on an output LED to which it is connected.

(2) Realization of a Demultiplexer using NAND gates (without including Enable line)

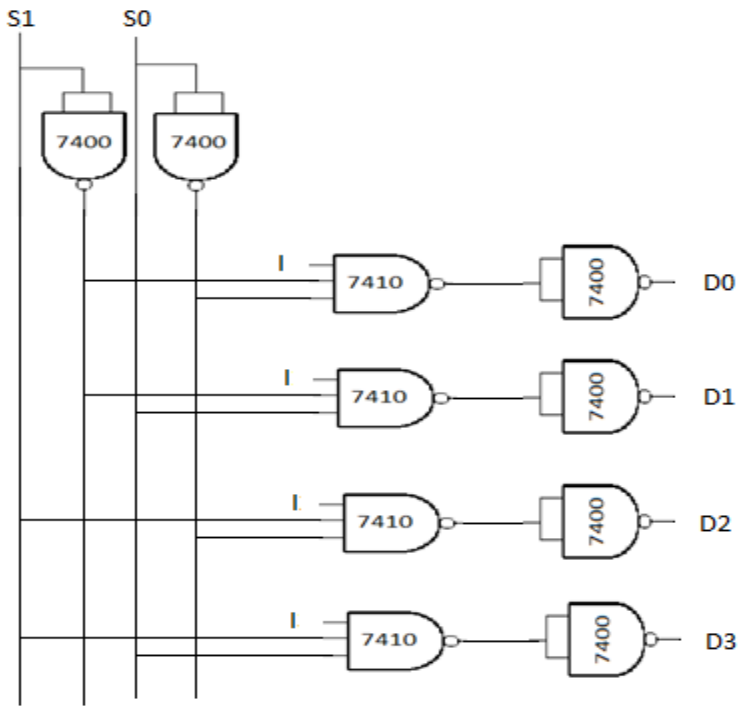

The connections are made according to the above circuit diagram. Inputs I, S1 and S0 are provided to the circuit through the input switches and the corresponding outputs (D0, D1, D2, D3) are observed on output LEDs to which they are connected.

(3) Boolean Expressions for a Half Adder: **S =A ⊕ B, C = A B ;**
S = ∑m (1, 2); **C = ∑m (3);**

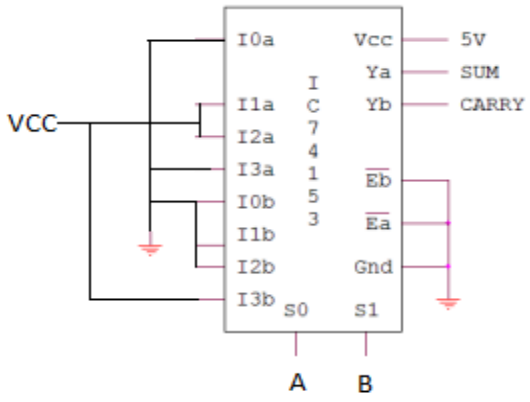

The connections are made according to the above diagram. Inputs A and B which are connected to the select lines S1 and S0 respectively, are provided to the circuit through the input switches and the corresponding Sum and Carry outputs are observed on output LEDs to which they are connected.

Boolean Expressions for a Full Adder: **S = (A ⊕ B) ⊕ Cin, C = AB + Cin (A ⊕ B)**
S = ∑m (1, 2, 4, 7); **C = ∑m (3, 5, 6, 7);**
Since the available IC is a Dual 4:1 multiplexer, the expressions for Sum and Carry are expressed in terms of Cin , so that the inputs A and B are used as select inputs S1 and S0. The connections

are made according to the diagram below. Inputs A, B and Cin are provided to the circuit through the input switches and the outputs S and C are observed on output LEDs.

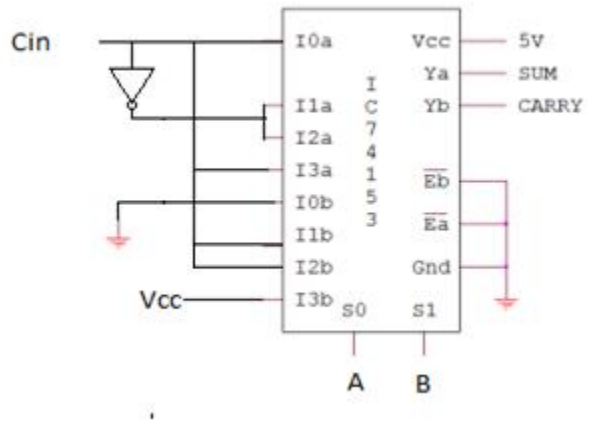

Inputs		Sum	Carry
A	B	S	C
0	0	Cin	0
0	1	Cin’	Cin
1	0	Cin’	Cin
1	1	Cin	1

OBSERVATIONS:

(1) TRUTH TABLE for 4:1 Multiplexer:

Select Inputs		Inputs				Output
S1	S0	I0	I1	I2	I3	Y
0	0	0	X	X	X	0
0	0	1	X	X	X	1
0	1	X	0	X	X	0
0	1	X	1	X	X	1
1	0	X	X	0	X	0
1	0	X	X	1	X	1
1	1	X	X	X	0	0
1	1	X	X	X	1	1

(2) TRUTH TABLE for 1:4 Demultiplexer

Select Inputs		Input	Outputs			
S1	S0	I	D0	D1	D2	D3
0	0	0	0	0	0	0
0	0	1	1	0	0	0
0	1	0	0	0	0	0
0	1	1	0	1	0	0
1	0	0	0	0	0	0
1	0	1	0	0	1	0
1	1	0	0	0	0	0
1	1	1	0	0	0	1

(2) TRUTH TABLEs for Half Adder and Full Adder:

Inputs		Outputs	
A	B	S	C
0	0	0	0
0	1	1	0
1	0	1	0
1	1	0	1

Truth Table for Half Adder

Inputs			Outputs	
A	B	Cin	S	C
0	0	0	0	0
0	0	1	1	0
0	1	0	1	0
0	1	1	0	1
1	0	0	1	0
1	0	1	0	1
1	1	0	0	1
1	1	1	1	1

Truth Table for Full adder

INFERENCE: All the above truth tables are verified by observing the outputs against various combinations of inputs.

<u>EXPERIMENT 8</u>: Study of IC 74138 (3:8 decoder), IC 74148(Octal to binary encoder), IC 7485 (4-bit Magnitude Comparator)

AIM:

(i) To verify the operation of a 3:8 decoder using IC 74138

(ii) To verify the operation of an Octal to binary encoder using IC 74148

(iii) To verify the operation of a 4-bit magnitude comparator using IC 7485

<u>THEORY:</u>

(i) **Decoder** is the combinational circuit which contains 'n' input lines to 2^2 output lines. The decoder is used for converting the binary code into the octal code. TheIC74138 is the 3*8 decoder which contains three inputs and eight outputs and also three enables out of them two are active low and one is active high. Decoders are used in the circuit where required to get more outputs than that of the inputs which also used in the chip designing process for reducing the IC chip area.

(ii) An **encoder** performs a function that is the opposite of decoder. It receives one or more signals in an encoded format and output a code that can be processed by another logic circuit. One of the advantages of encoding data, or more often data addresses in computers, is that it reduces the number of required bits to represent data or addresses. For example, if a memory has 16 different locations, in order to access these 16 different locations, 16 lines (bits) are required if the addressing signals are in 1 out of n format. However, if we code the 16 different addresses into a binary format, then only 4 lines (bits) are required. Such a reduction improves the speed of information processing in digital systems

(iii) Comparing two binary words for equality is a commonly used operation in computer systems and device interfaces. A circuit that compares two binary words and indicates whether they are equal is called a **comparator.**
Some comparators interpret their input words as signed or unsigned numbers and also indicate an arithmetic relationship (greater or less than) between the words. These devices are often called **magnitude comparators.**
A 1-bit Comparator is designed using Ex-OR and Ex-NOR gates. The outputs of 4 XOR gates are ORed to create a 4-bit comparator. The IC 7485 is a 4-bit magnitude comparator. With respect to the 8 inputs 3 inputs are cascaded inputs. After the 8 input operations are performed further the outputs are based on the cascaded inputs.
Therefore, we can say that a Magnitude Comparator is a logical circuit, which compares two signals A and B and generates three logical outputs, whether A > B, A = B, or A < B. IC 7485 is a high speed 4-bit Magnitude comparator , which compares two 4-bit words . The A = B Input must be held high for proper compare operation

<u>COMPONENTS REQUIRED:</u> IC 74138 (3:8 decoder), IC 74148(Octal to binary encoder), IC 7485 (4-bit Magnitude Comparator), Digital Trainer Kit

<u>PROCEDURE:</u>

(i) Make connections as per the diagram below: Apply different combinations of inputs to the inputs using the input switches and observe the outputs in the output LEDs.

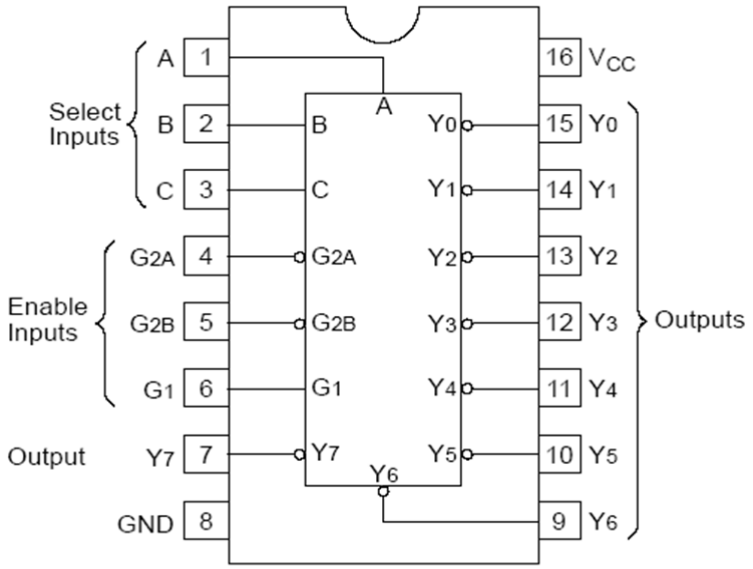

(ii) Make connections as per the diagram below: Apply octal input using the input switches and observe the corresponding binary outputs (3-bits) in the output LEDs.

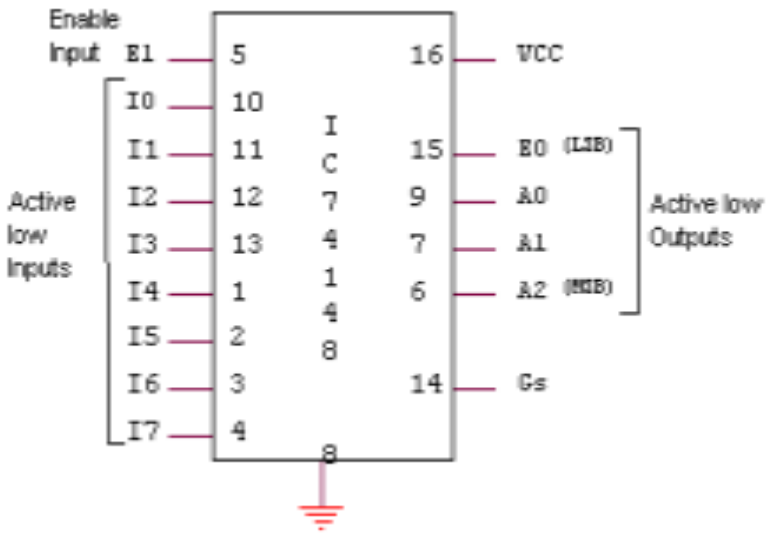

(iii) Make connections as per the diagram below: Apply 2 4-bit numbers to A3-A0 and B3-B0 using the input switches. The outputs A>B, A<B and A=B will be reflected in the output LEDs.

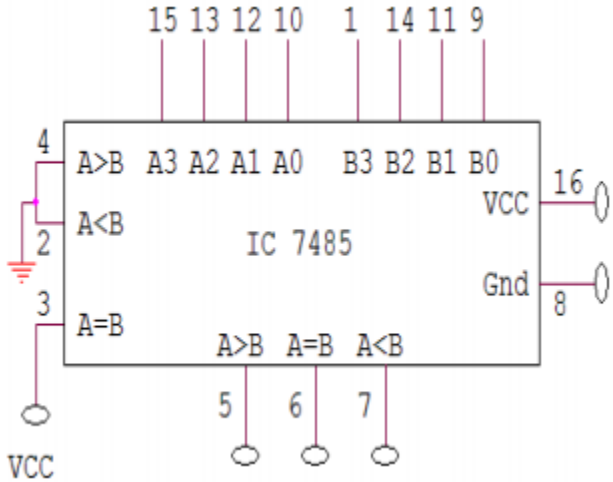

OBSERVATIONS:

(i)

G1	G2a	G2b	A2	A1	A0	Y0	Y1	Y2	Y3	Y4	Y5	Y6	Y7
0	X	X	X	X	X	1	1	1	1	1	1	1	1
X	1	1	X	X	X	1	1	1	1	1	1	1	1
1	0	0	0	0	0	0	1	1	1	1	1	1	1
1	0	0	0	0	1	1	0	1	1	1	1	1	1
1	0	0	0	1	0	1	1	0	1	1	1	1	1
1	0	0	0	1	1	1	1	1	0	1	1	1	1
1	0	0	1	0	0	1	1	1	1	0	1	1	1
1	0	0	1	0	1	1	1	1	1	1	0	1	1
1	0	0	1	1	0	1	1	1	1	1	1	0	1
1	0	0	1	1	1	1	1	1	1	1	1	1	0

(ii)

Inputs									Outputs				
E_1	I_0	I_1	I_2	I_3	I_4	I_5	I_6	I_7	A_2	A_1	A_0	G_S	E_0
1	X	X	X	X	X	X	X	X	1	1	1	1	1
0	1	1	1	1	1	1	1	1	1	1	1	1	0
0	X	X	X	X	X	X	X	0	0	0	0	0	1
0	X	X	X	X	X	X	0	1	0	0	1	0	1
0	X	X	X	X	X	0	1	1	0	1	0	0	1
0	X	X	X	X	0	1	1	1	0	1	1	0	1
0	X	X	X	0	1	1	1	1	1	0	0	0	1
0	X	X	0	1	1	1	1	1	1	0	1	0	1
0	X	0	1	1	1	1	1	1	1	1	0	0	1
0	0	1	1	1	1	1	1	1	1	1	1	0	1

(iii)

A				B				Result
A3	**A2**	**A1**	**A0**	**B3**	**B2**	**B1**	**B0**	
0	0	0	1	0	0	0	0	**A > B**
0	0	0	1	0	0	0	1	**A = B**
0	0	0	0	0	0	0	1	**A < B**

INFERENCE: The respective truth tables for the 3:8 decoder (IC 74138), octal to binary encoder (IC 74148) and 4-bit magnitude comparator (IC 7485) are verified.

EXPERIMENT 9: Construction of flip-flops.

AIM: Design of flip flops and verification of respective truth tables
(a) SR flip-flop
(b) JK flip-flop (Master Slave)

THEORY:

Logic circuits that incorporate memory cells are called sequential logic circuits; their output depends not only upon the present value of the input but also upon previous values. Sequential logic circuits often require a timing generator (a clock) for their operation.

SR flip flop:
An S-R flip-flop can be designed using cross-coupled NAND gates as shown in the figure below. The truth tables of the circuits are also shown below. A clocked S-R flip-flop has an additional clock input so that the S and R inputs are active only when the clock is high. When the clock goes low, the state of flip-flop is latched and cannot change until the clock goes high again. Therefore, the clocked S-R flip-flop is also called "enabled" S-R flip-flop.

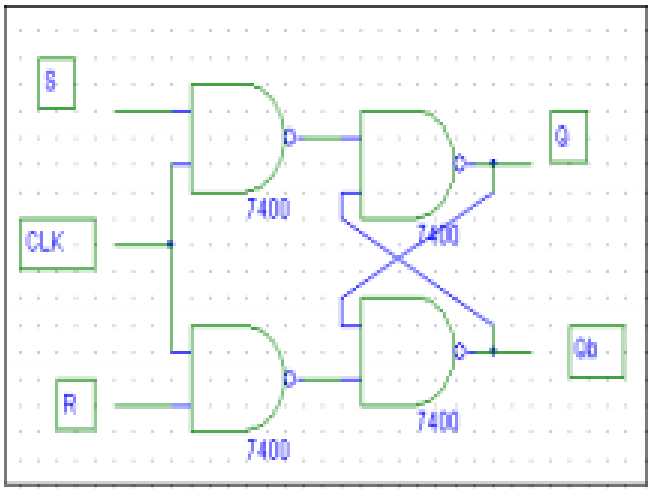

Sn	Rn	Qn+1
0	0	Qn
0	1	0
1	0	1
1	1	X

Master Slave J K flip flop:
The problem of race around condition in a J-K flip flop when both the inputs to it are'1' can be solved by using a Master Slave configuration. The following are the constructional features of a Master-Slave J-K flip flop:-

It consists of two S-R flip flops connected in series with each other, so that the outputs of the first flip flop act as inputs to the second. The outputs of the second flip-flop say Q and Q', are fed back to the first flip flop along with the original inputs S and R by using two AND gates. The new inputs J and K thus obtained are given by the logical equations:-

J=S.Q' -- (1) and K= R.Q --- (2)

The same clock is fed to both the flip flops but an inverter gate is used in the line that carries the clock signal to the second flip flop.

A Master-Slave J-K flip works as an ordinary R-S flip flop for the input conditions of J=0 and K=0 (memory state), J=0 and K=1 (reset state), J=1 and K=0 (set state). For the inputs J=1 and K=1 which is an unused and unreliable state in an ordinary R-S flip flop, but due to the feedback of the outputs in to the inputs as shown by equations (1) and (2), this state now acts as a toggle state of a flip flop. This means

that whenever J=1 and K=1 are the inputs to the flip flop, the outputs Q and Q' both get complimented from their previous values

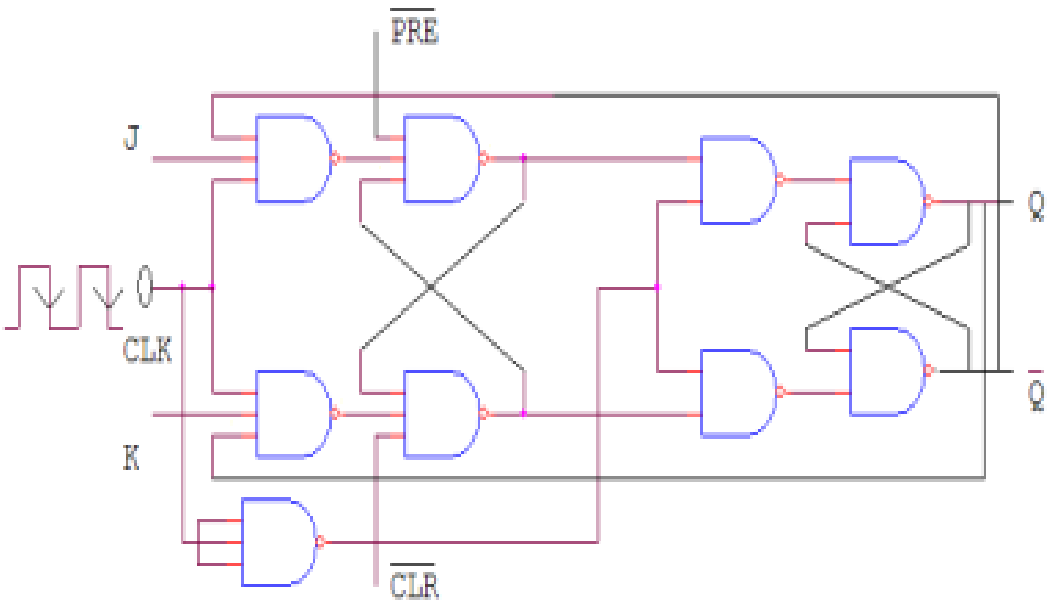

TRUTH TABLE

$\overline{PRE}$ = $\overline{CLR}$ = 1

Clock	J	K	Q+	$\overline{Q}$ +	Comment
1	0	0	Q	$\overline{Q}$	No Change
1	0	1	0	1	Reset
1	1	0	1	0	Set
1	1	1	$\overline{Q}$	Q	Toggle

COMPONENTS REQUIRED: IC 7400(Quad 2-input NAND gate), IC 7410(Quad 3-input NAND gate), Patch Cords, Digital Trainer Kit.

PROCEDURE:

• Check all the components for their working.

• Make connections as shown in the circuit diagram.

• Verify the Truth Table and observe the outputs.

INFERENCE: The truth tables for the SR flip flop and MS JK Flip flop are verified.

EXPERIMENT 10: STUDY OF ASYNCHRONOUS/ SYNCHRONOUS COUNTER

AIM: To design and test a 3-bit binary asynchronous/synchronous counter using flip-flop IC 74112

LEARNING OBJECTIVE: To understand the design of asynchronous / synchronous up/ down counter

COMPONENTS REQUIRED: IC 74112, Patch Cords & IC Trainer Kit

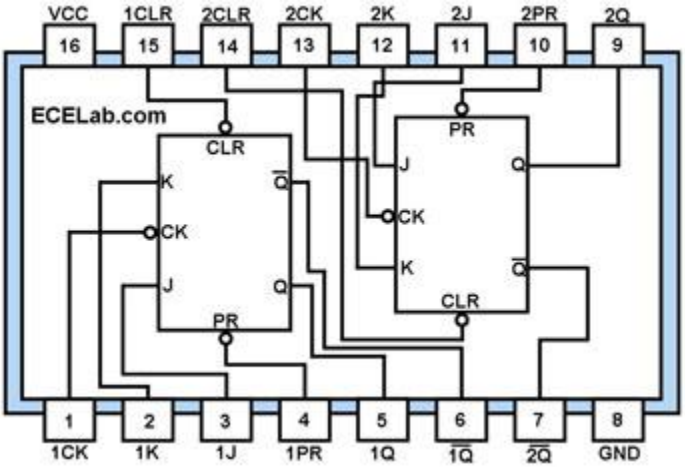

THEORY:

An **asynchronous/ ripple counter** is a serial counter. The clock input is applied to only the first of the series of the Flip Flop. Clock pulses for the other Flip Flop come from the preceding Flip Flop. Thus, the clock pulse "ripple" through the circuit in a series fashion. Such circuit is also called asynchronous since the only pulse required for the operation is the clock pulse. The JK Flip Flop have the J and K inputs both tied high, which allows them to toggle with each input pulse.

The asynchronous counter has the limitation of the time lag in triggering all the Flip Flops. To cure this problem, **synchronous/parallel counters** can be used. The logic diagram for a 3-bit parallel counter is shown in fig 7-2. Note that all CLK inputs are tied directly to input clock.

PROCEDURE:

• Check all the components for their working.

• Make connections as shown in the circuit diagram.

• Verify the Truth Table and observe the outputs.

CIRCUIT DIAGRAM and TRUTH TABLE for a 3-bit ASYNCHRONOUS COUNTER:

CIRCUIT DIAGRAM:

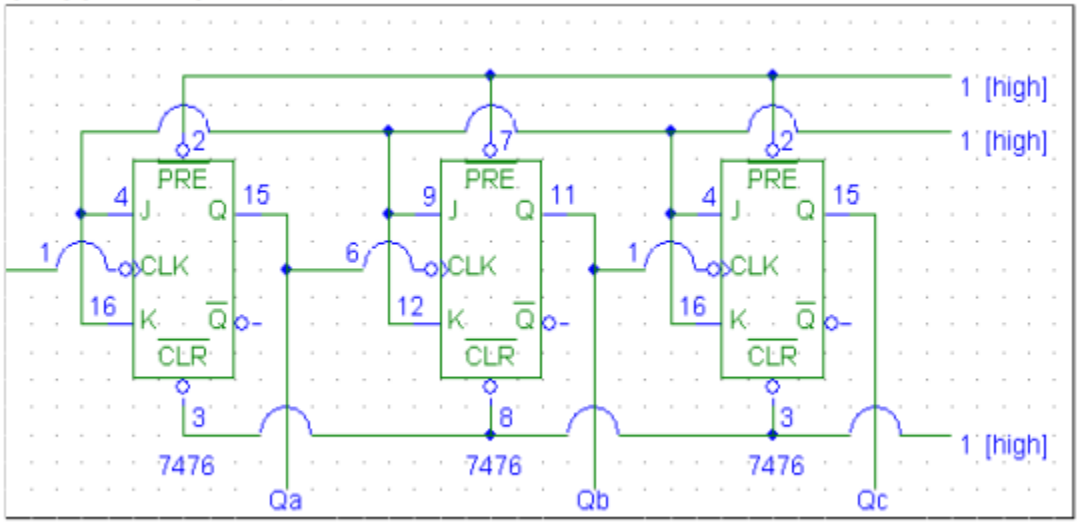

TRUTH TABLE

CLK	Q_C	Q_B	Q_A
0	0	0	0
1	0	0	1
2	0	1	0
3	0	1	1
4	1	0	0
5	1	0	1
6	1	1	0
7	1	1	1
8	0	0	0

TRUTH TABLE & CIRCUIT DIAGRAM for a 3-bit SYNCHRONOUS COUNTER:

MOD 8 COUNTER:

TRUTH TABLE:

Q_C	Q_B	Q_A
0	0	0
0	0	1
0	1	0
0	1	1
1	0	0
1	0	1
1	1	0
1	1	1
0	0	0

Present count			next count		
Q_C	Q_B	Q_A	Q_C	Q_B	Q_A
0	0	0	0	0	1
0	0	1	0	1	0
0	1	0	0	1	1
0	1	1	1	0	0
1	0	0	1	0	1
1	0	1	1	1	0
1	1	0	1	1	1
1	1	1	0	0	0

JK FF excitation table:

Q	Q+	J	K
0	0	0	X
0	1	1	X
1	0	X	1
1	1	X	0

DESIGN:

1	X	X	1
1	X	X	1

$J_A = 1$

X	1	1	X
X	1	1	X

$K_A = 1$

0	1	X	X
X	1	X	X

$J_B = Q_A$

X	X	1	0
X	X	1	0

$K_B = Q_A$

0	0	1	0
X	X	X	X

$J_C = Q_B Q_A$

X	X	X	X
0	0	1	0

$K_C = Q_B Q_A$

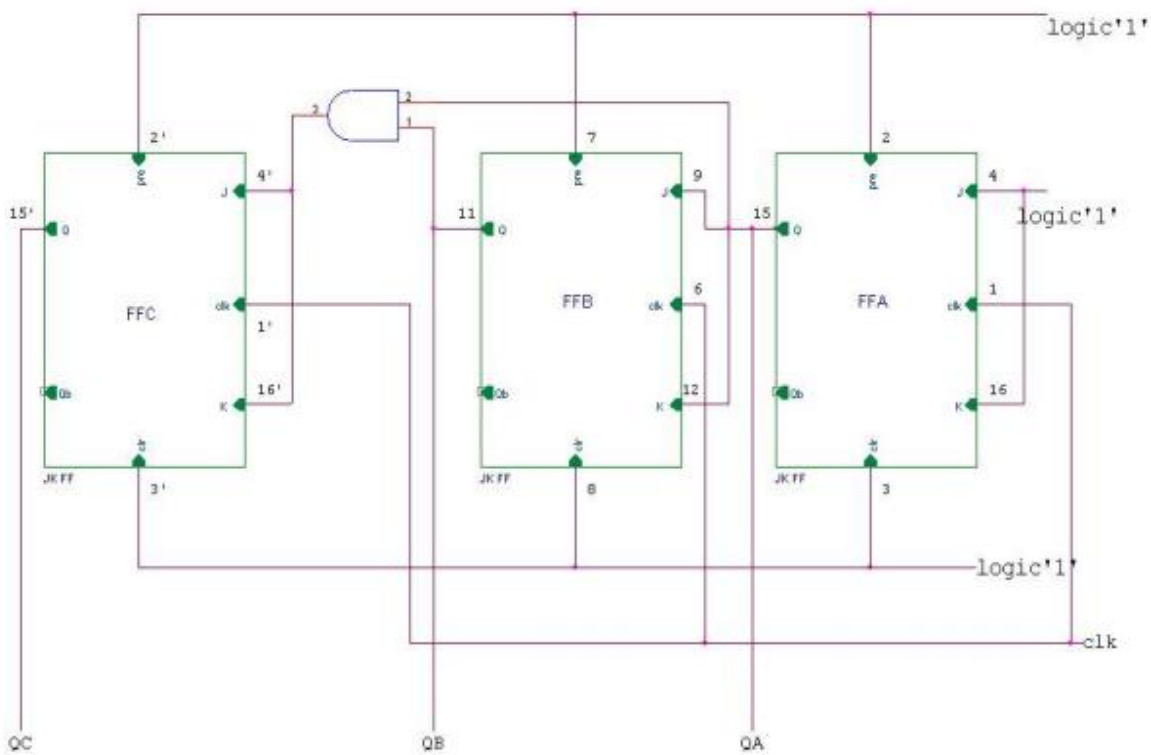

INFERENCE: The working of asynchronous/ synchronous counters are verified.